OONO®

CZH-LABS.com

DC Power Distribution Module

with Switch and Fuse, DIN rail or Screw Mounting

D-1730TCL, D-1731TCL, D-1732TCL





Features:

- Operating voltage DC 5 to 58V. Total rated current 52 Amps. Paddle switch. Pluggable side wiring terminal block. 4 / 8 / 16 Channel output.
- Input: Rated current 52 Amps. Dual input screw terminal block, the direction of the input terminal wiring can be flexibly selected, and it can also be extended to other modules as its input source. Pitch 10.16mm/0.4", wire range 20 - 6AWG / 10mm square, strip length 10mm, screw - metric M4.
- Output: Maximum current 5 Amps for per channel (the factory-installed fuse is 5 amps. If the fuse is replaced, the maximum current can be up to 10 amps). Pluggable terminal block, pitch 5.08mm/0.2", wire range 28 - 12AWG / 2.5mm square, stripping length 7mm, screw - metric M2.5 slotted.
- Each output terminal is equipped with an independent switch, which can flexibly control the power supply of each load device.
- Each output terminal is equipped with an independent fuse, which can protect the power supply of each load device and are not affected by each other. Medium blade ATO fuse, factory pre-installed fuse value is 5 Amp. The fuse holder supports fuse replacement, each output port suport fuse current up to 10 Amp.
- Each output terminal is equipped with a green LED power indicator. The indicator light comes on when power is on and goes off when the switch is off or the fuse fails.
- High quality fireproof nylon material DIN rail mount carrier, can support width 35mm, 32mm or 15mm rail. Aluminum top cover. A pair of DIN rail to Wall mounting adapter brackets are also included, which will support wall or wood panel mounting.
- UL CE CQC certified terminal blocks. UL 94-V0 certified PCB, and UL CE certified DIN rail mount carrier. UL certified fuse holder and fuse. UL CE certified switch.
- Operating Temperature: -40 to 85C.

Version List:

D-1730TCL, 4 channel output, Paddle switch, Top wiring terminal block.
D-1731TCL, 8 channel output, Paddle switch, Top wiring terminal block.
D-1732TCL, 16 channel output, Paddle switch, Top wiring terminal block.

Schematic (example 8 channel):

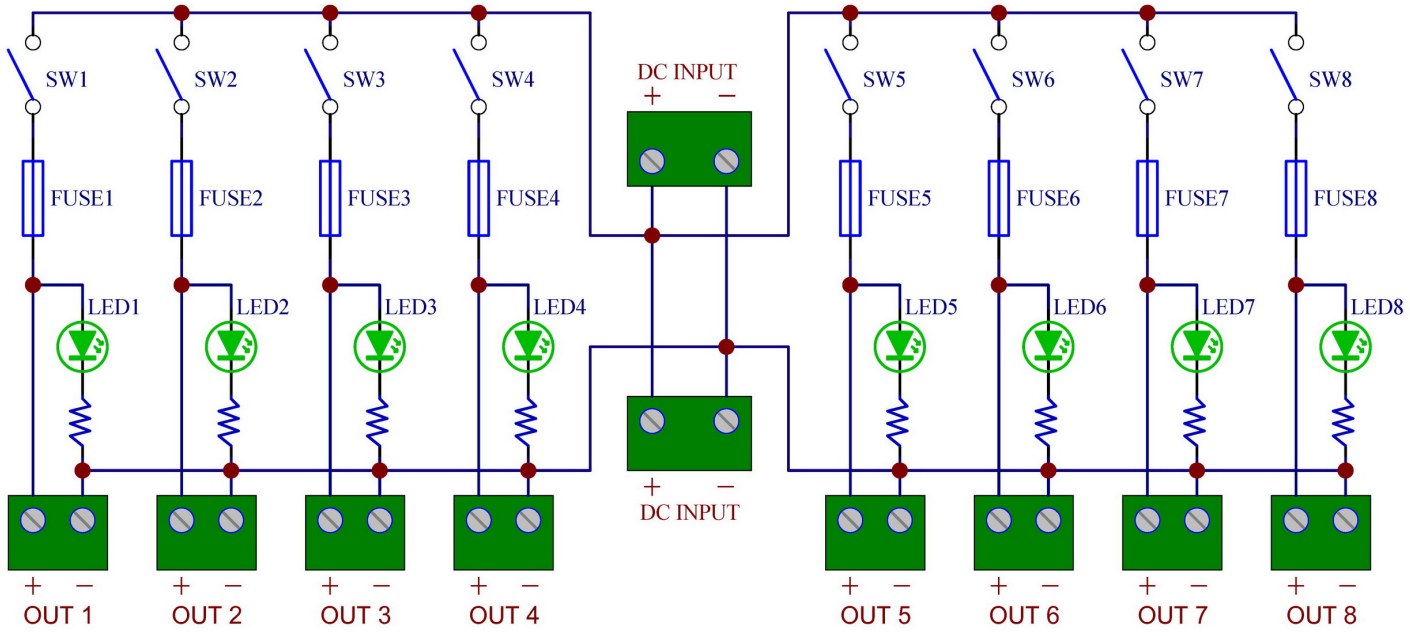

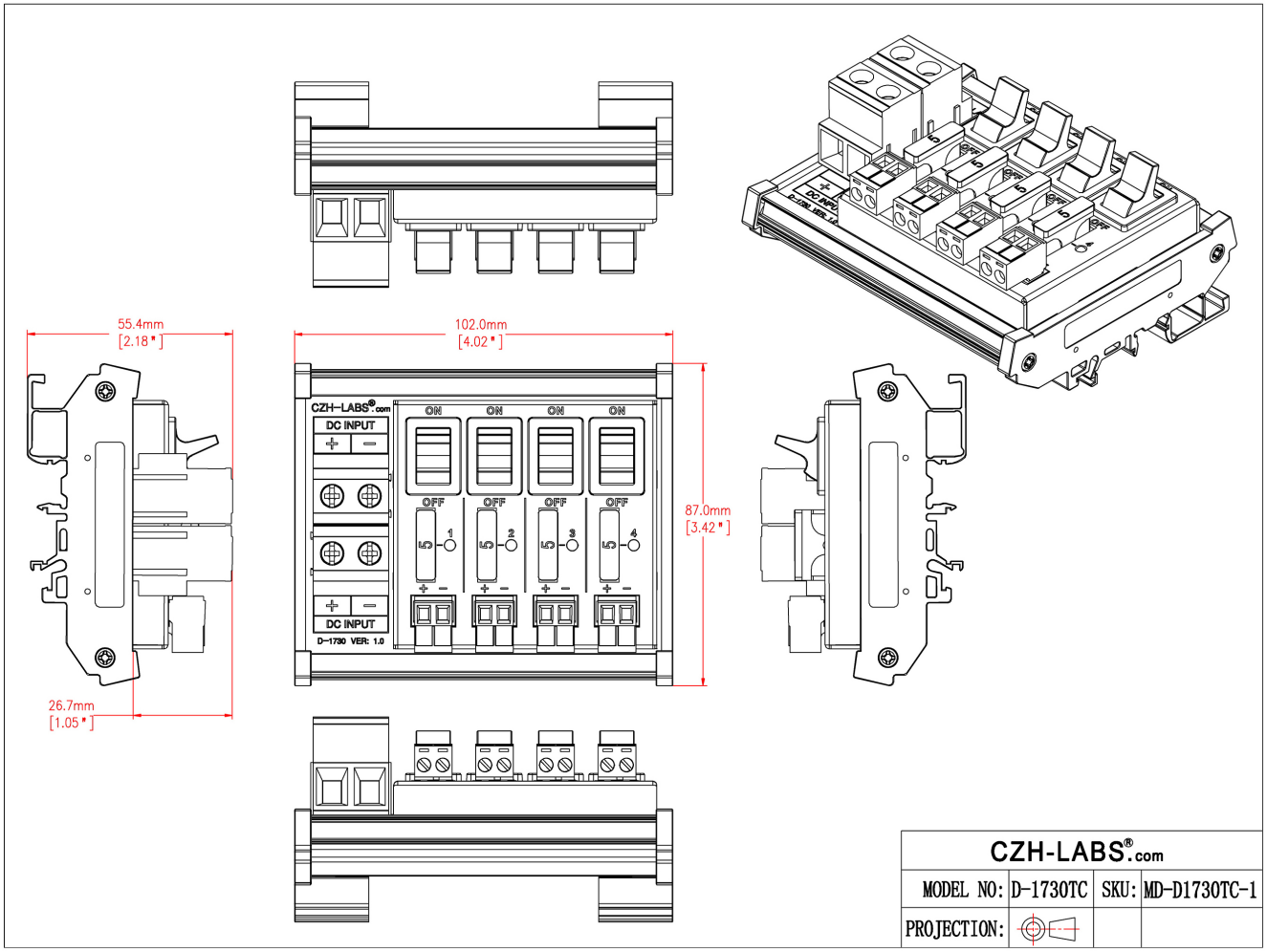

CZH-LABS®.com			
MODEL NO:	D-1730TC	SKU:	MD-D1730TC-1
PROJECTION:			

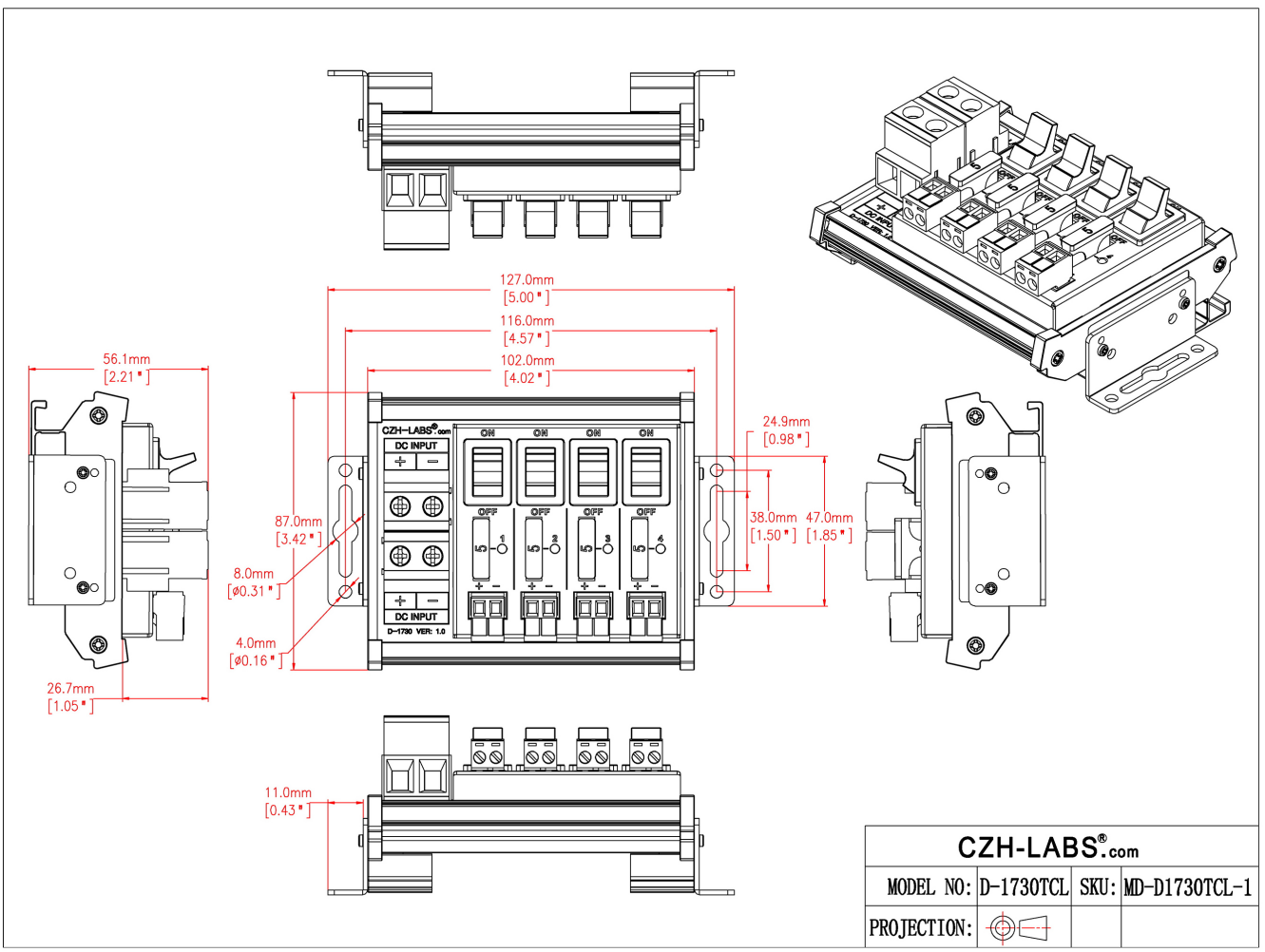

CZH-LABS®.com			
MODEL NO:	D-1730TCL	SKU:	MD-D1730TCL-1
PROJECTION:			

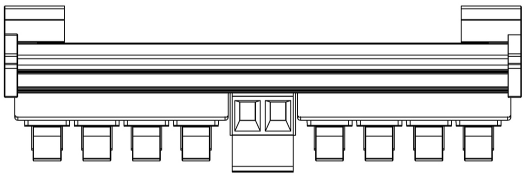

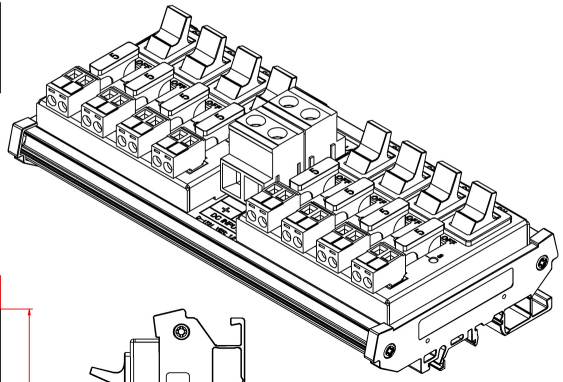

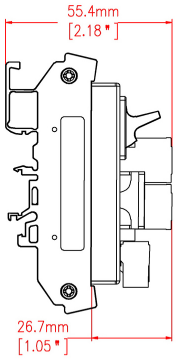

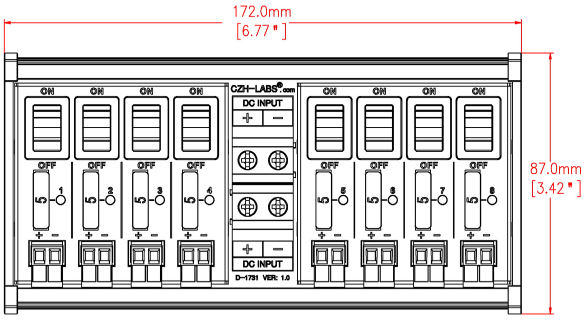

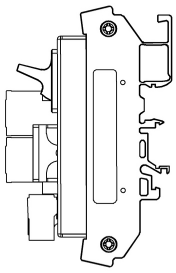

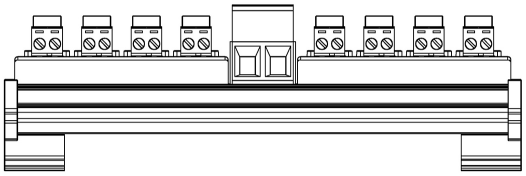

CZH-LABS®.com			
MODEL NO:	D-1731TC	SKU:	MD-D1731TC-1
PROJECTION:			

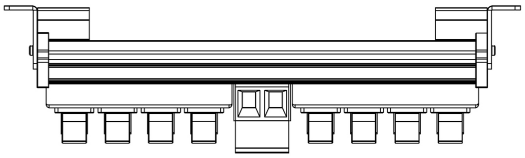

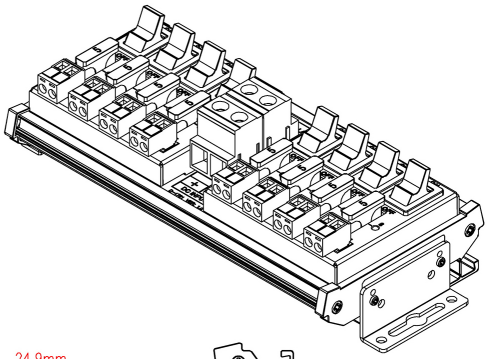

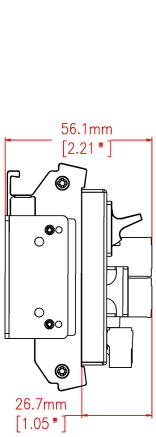

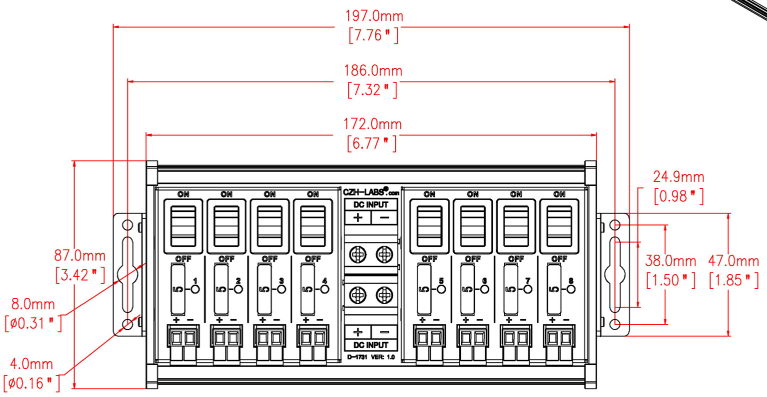

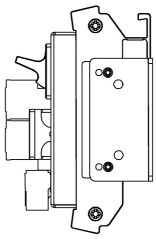

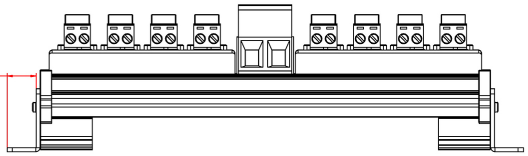

CZH-LABS®.com			
MODEL NO:	D-1731TCL	SKU:	MD-D1731TCL-1
PROJECTION:			

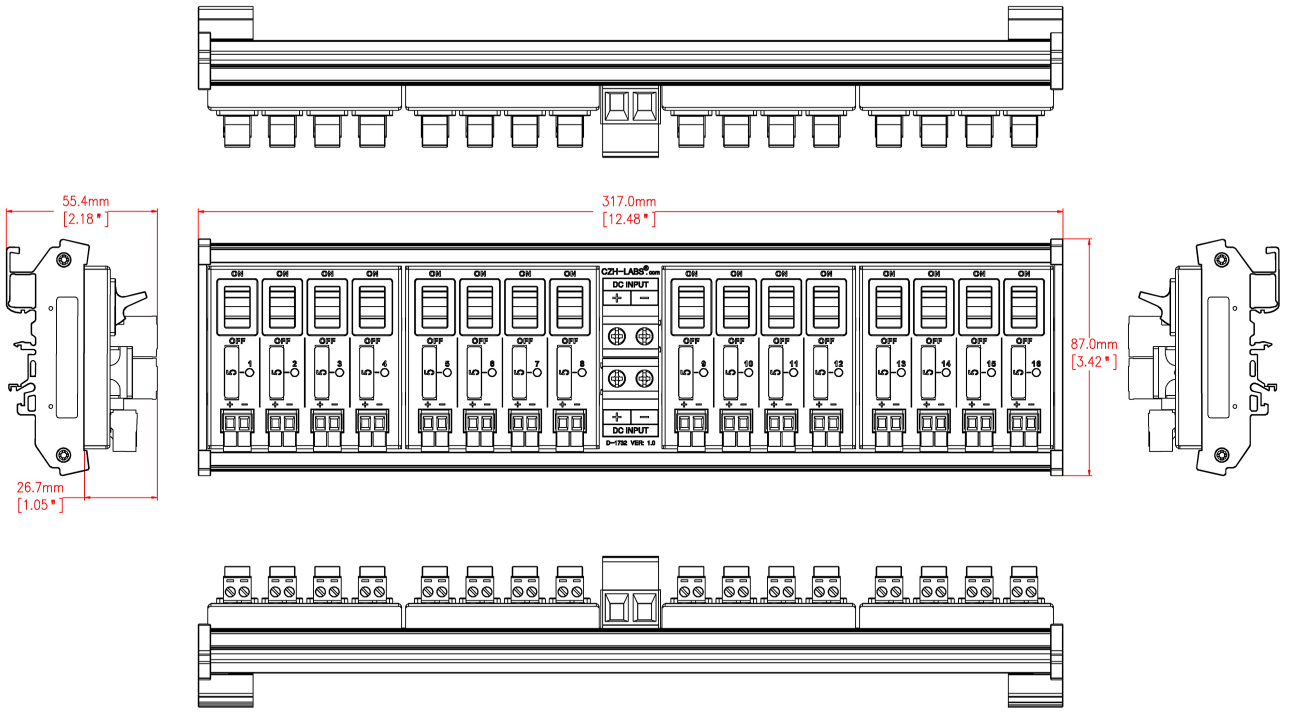

CZH-LABS®.com			
MODEL NO:	D-1732TC	SKU:	MD-D1732TC-1
PROJECTION:			

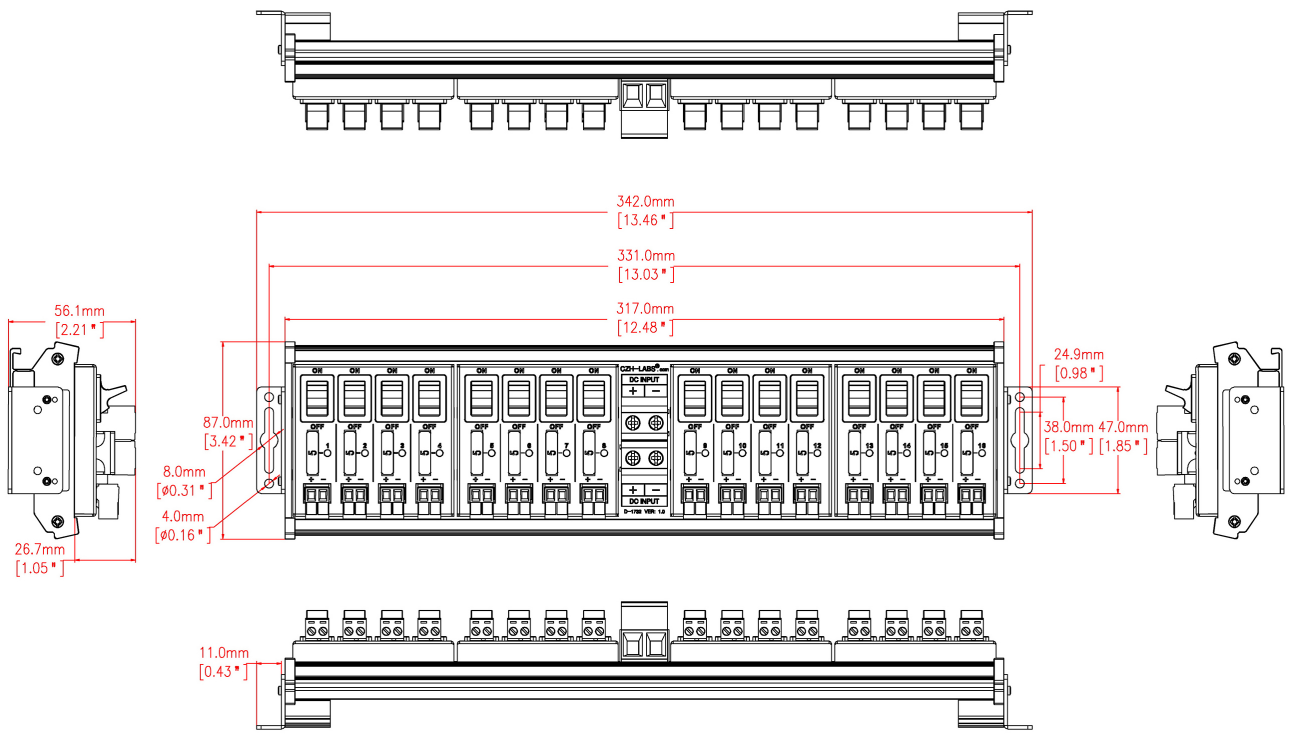

CZH-LABS®.com			
MODEL NO:	D-1732TCL	SKU:	MD-D1732TCL-1
PROJECTION:			