AudioWind Electronics-Salon

Mono 25W Audio Power Amplifier

Model: A-500

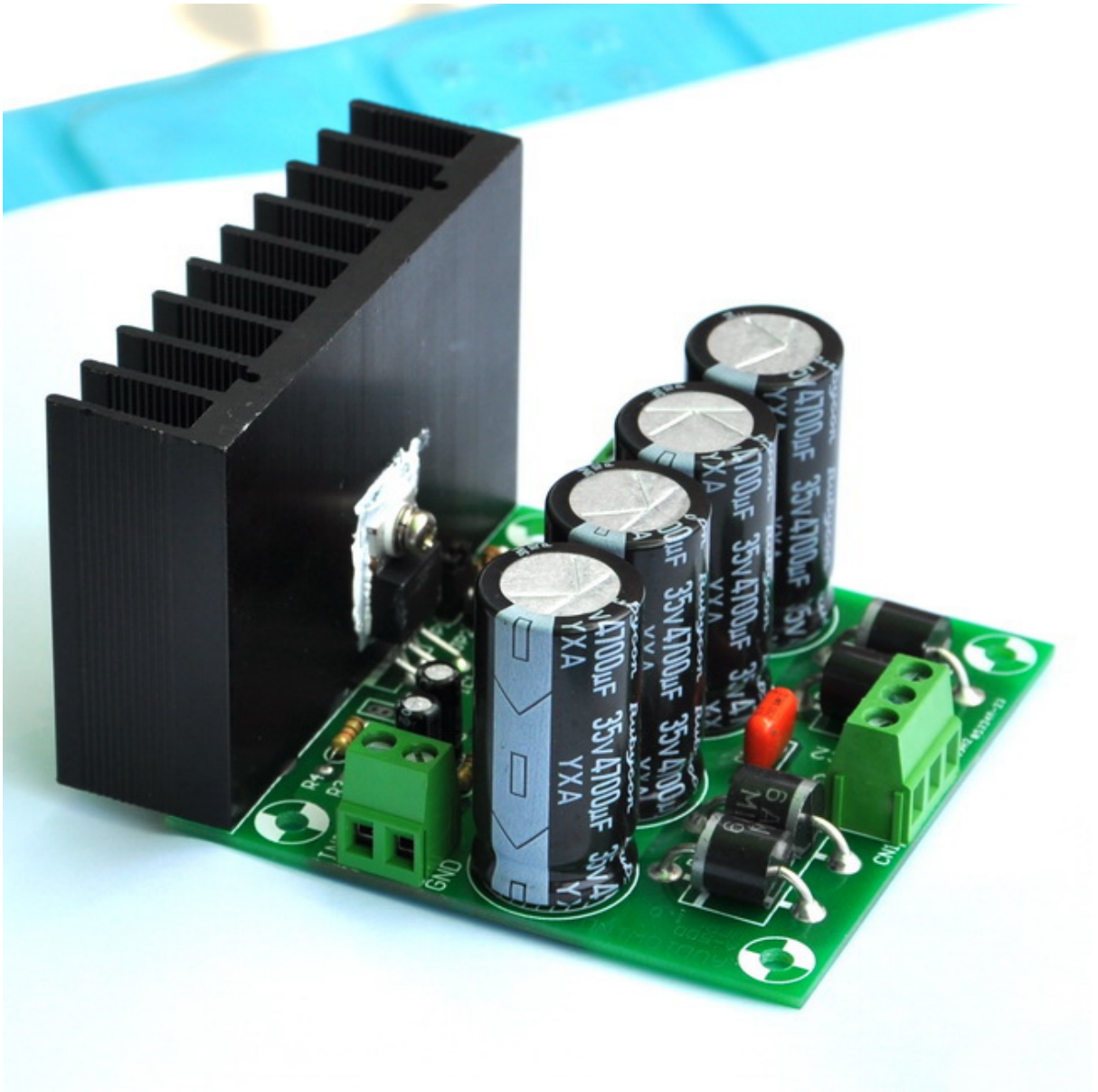

Mono 25 Watts Audio Power Amplifier

Based on LM1875T IC design

Specifications:

Power Supply Input: Dual 19 +/-1 V AC (Power Transformer > 60VA)

Input Level: 600mV RMS.

Output Power: >= 25 Watts (@THD=1%, 4 OHM Load).

Frequency Response: 30 Hz to 100 KHz. (-3dB).

THD: < 0.02% (@20 Watts, 4 OHM Load).

Voltage Gain: about 26 +/-1 dB.

Size:

Module Size: 76.2 x 91 x 56 mm (3 x 3.6 x 2.2 inch).

Heatsink Size: 76.2 x 50 x 22 mm (3 x 2 x 0.87 inch).

PCB Size: 76.2 x 76.2 mm (3 x 3 inch).

This is a very typical LM1875 amplifier, detailed electrical specifications please read National Semiconductor datasheet:

http://www.national.com/ds/LM/LM1875.pdf

Any questions, feel free to tell me, my email:

Jianglily2005@gmail.com

Wring Diagram:

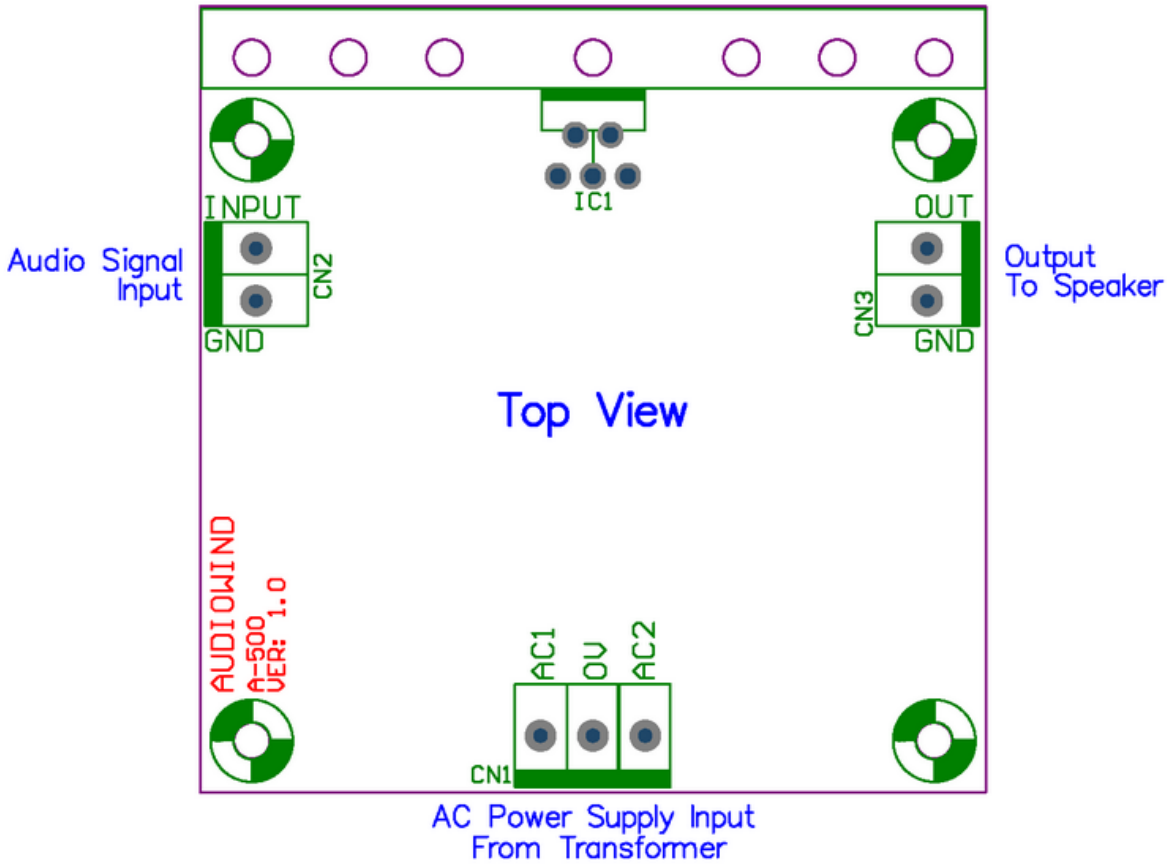

PCB Size and Components Placement:

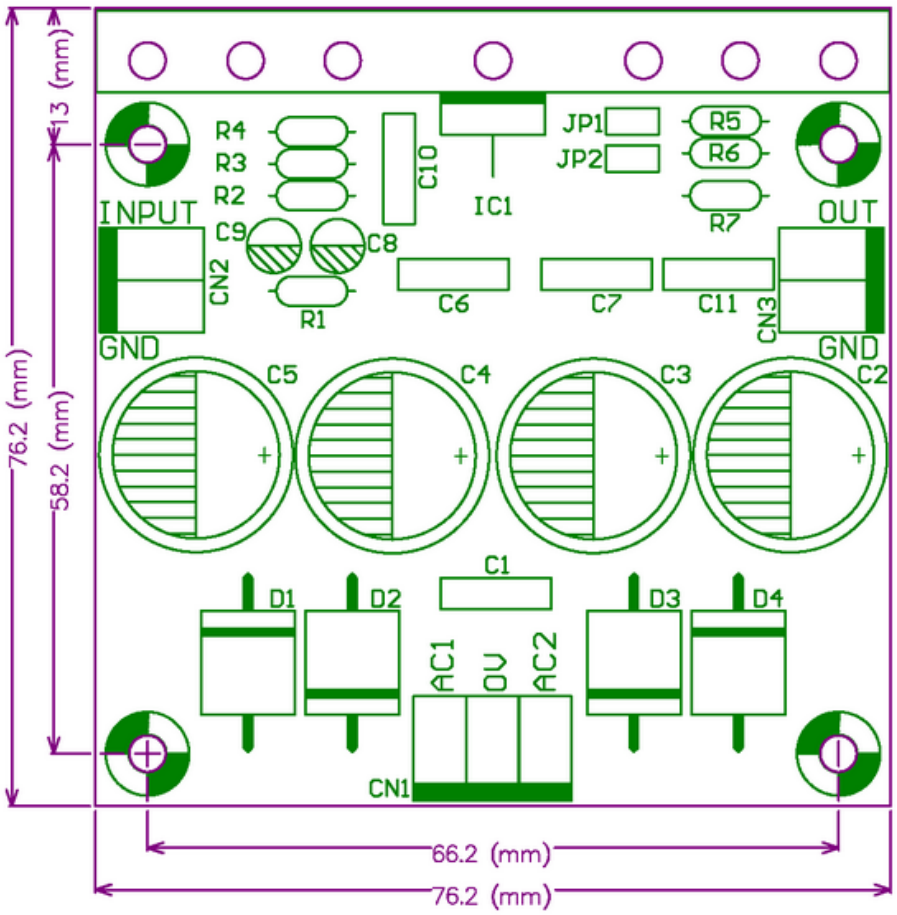

PCB Layout:

Top Layer

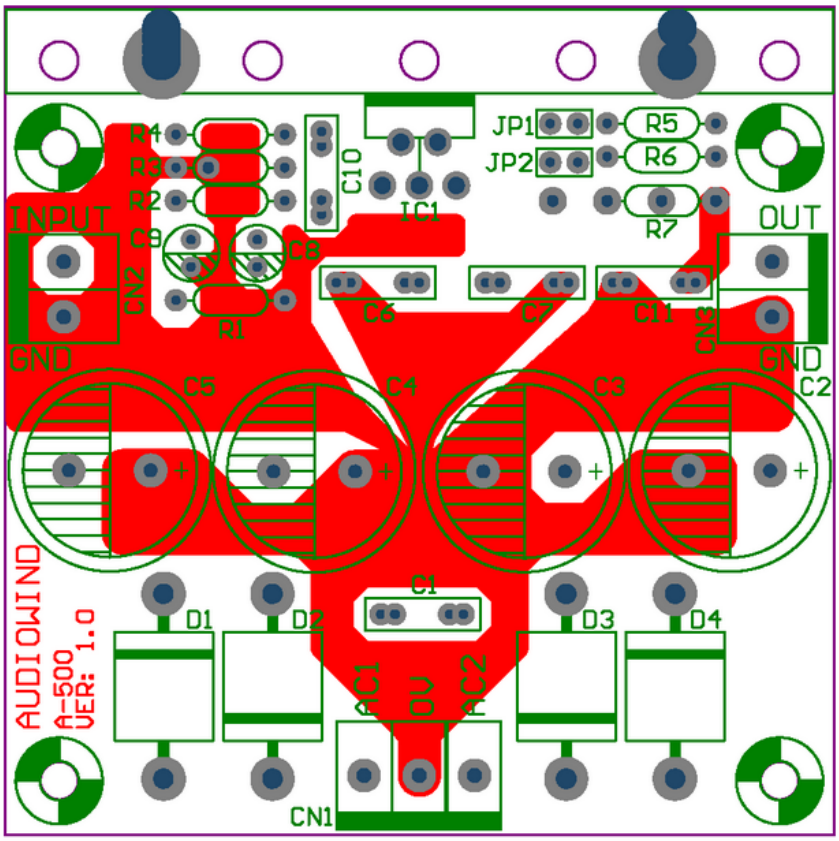

Bottom Layer

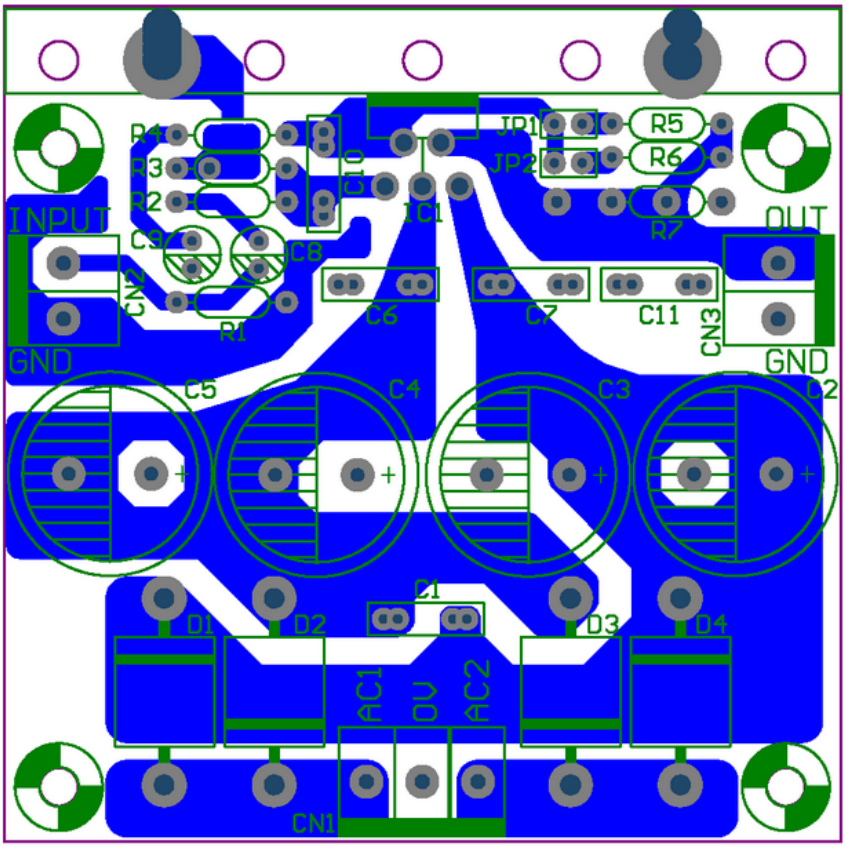

Schematic:

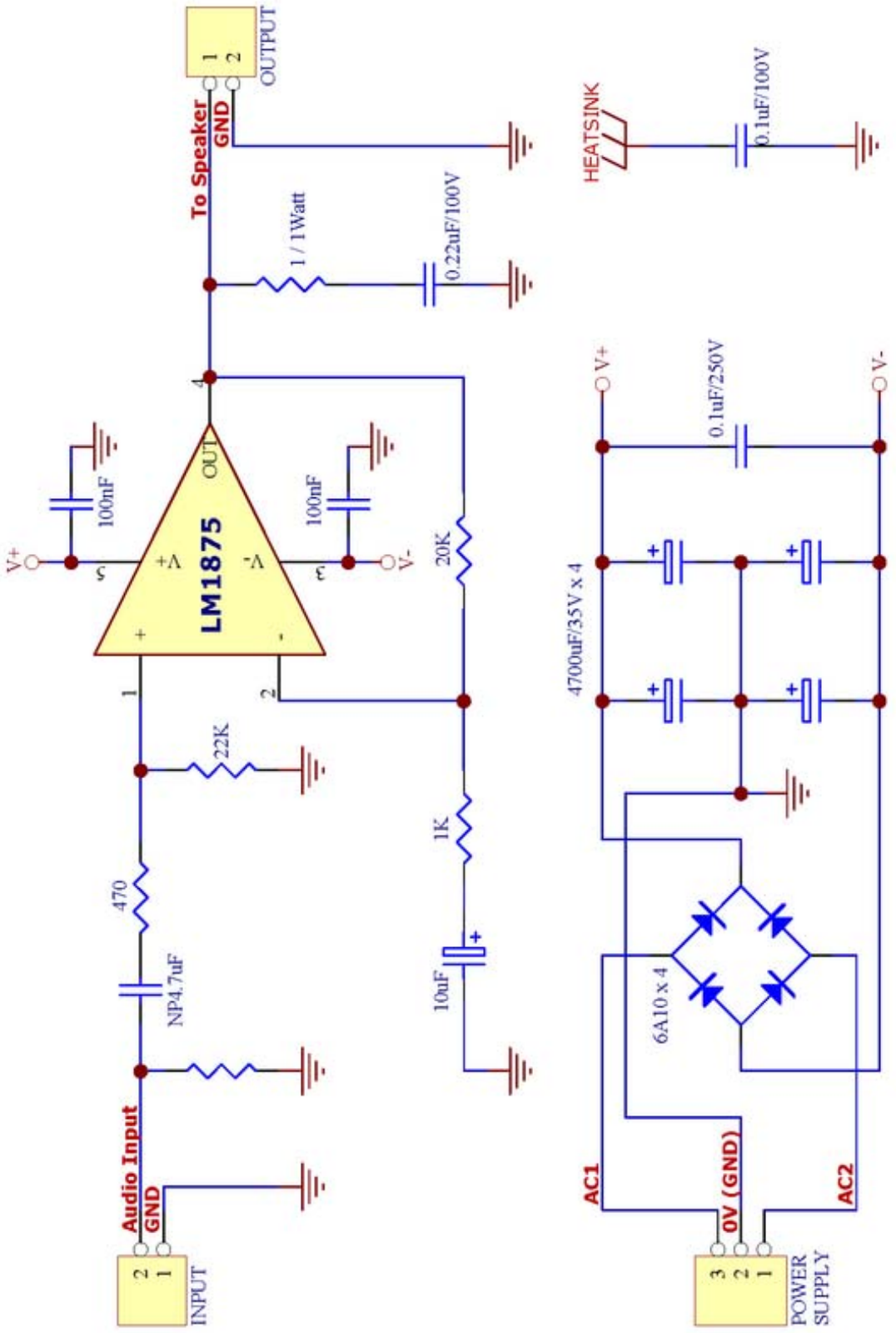
OUTPUT
To Speaker
GND
1 / 1Watt
0.22uF/100V
HEATSINK
0.1uF/100V
V+
V-
0.1uF/250V
4700uF/35V x 4
LM1875
OUT
100nF
100nF
20K
22K
1K
10uF
470
NP4.7uF
Audio Input
GND
INPUT
6A10 x 4
AC1
0V (GND)
AC2
POWER SUPPLY