AudioWind
Electronics-Salon

SPECIFICATION

Model: A-300

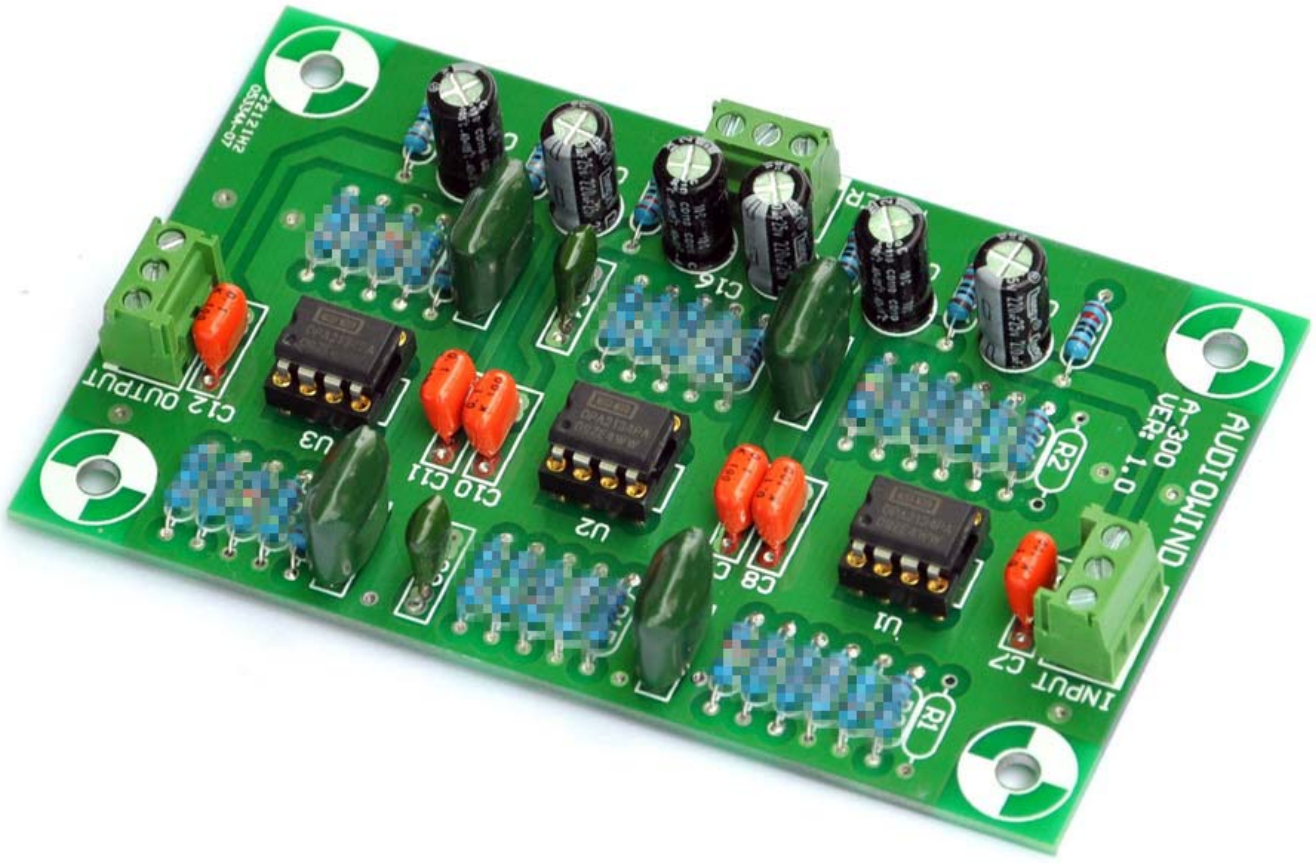

MM Phono Preamplifier Module Board

Best Operating Voltage: **+/-9V DC to +/-15V DC.**

Gain: **40dB.**

Input Impedance: **47K ohm.**

Output Impedance: **330 ohm.**

RIAA Accuracy: **<1dB.**

Bandwidth: **20 to 100KHz (-3dB).**

Distortion: **0.05% (@1KHz).**

SNR: **>68dB(use batteries supply).**

Size: **100 x 60 x 16mm (L x W x H).**

Used high-quality electronic components:

Thickness 1.6mm FR-4 fiber glass PCB (double layer).

HQ terminal blocks easy connection wire.

Polyester film and metallized film capacitors.

Precision 1% metal film resistors.

Ultra low noise and low distortion audio OP AMP OPA2134PA.

Gold-plated OP AMP IC socket, can easily replace other OP AMP.

Wring Diagram:

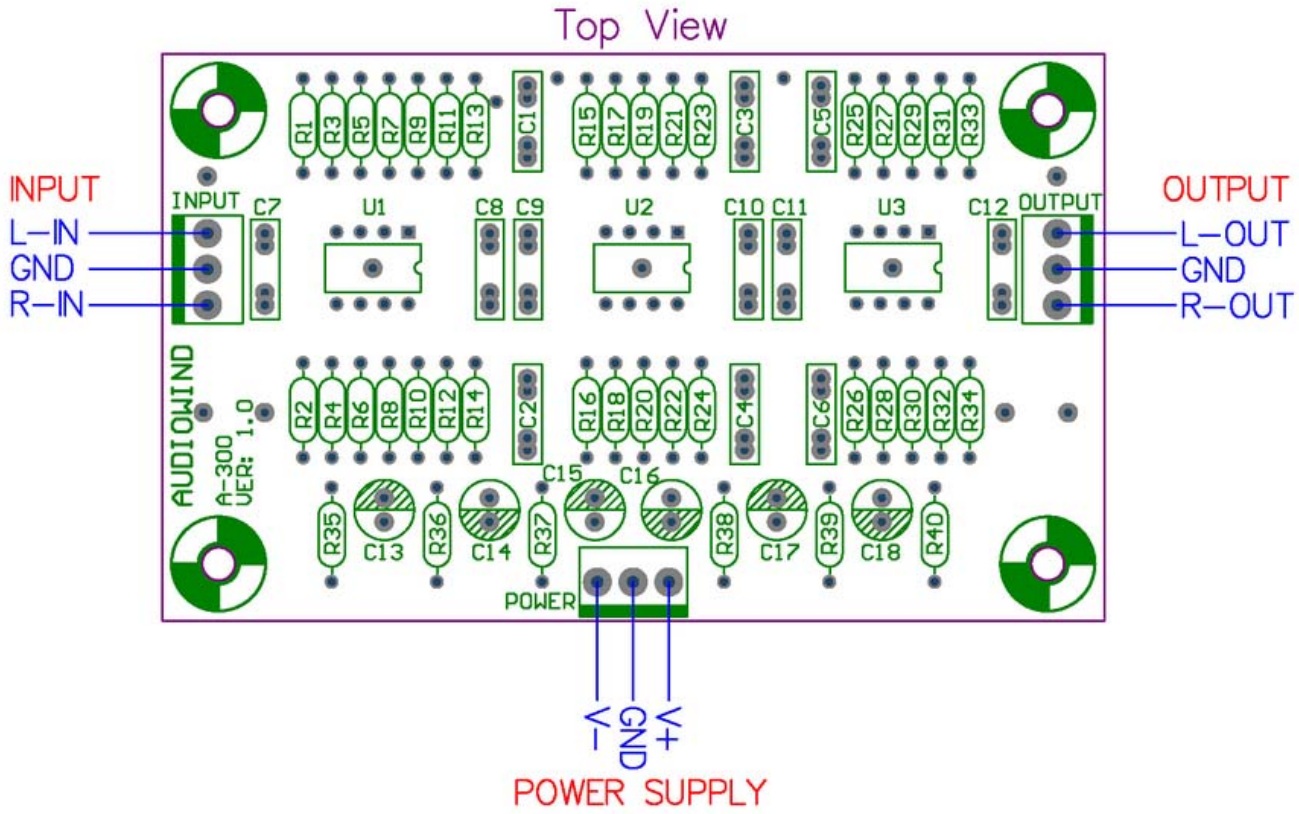

PCB Size:

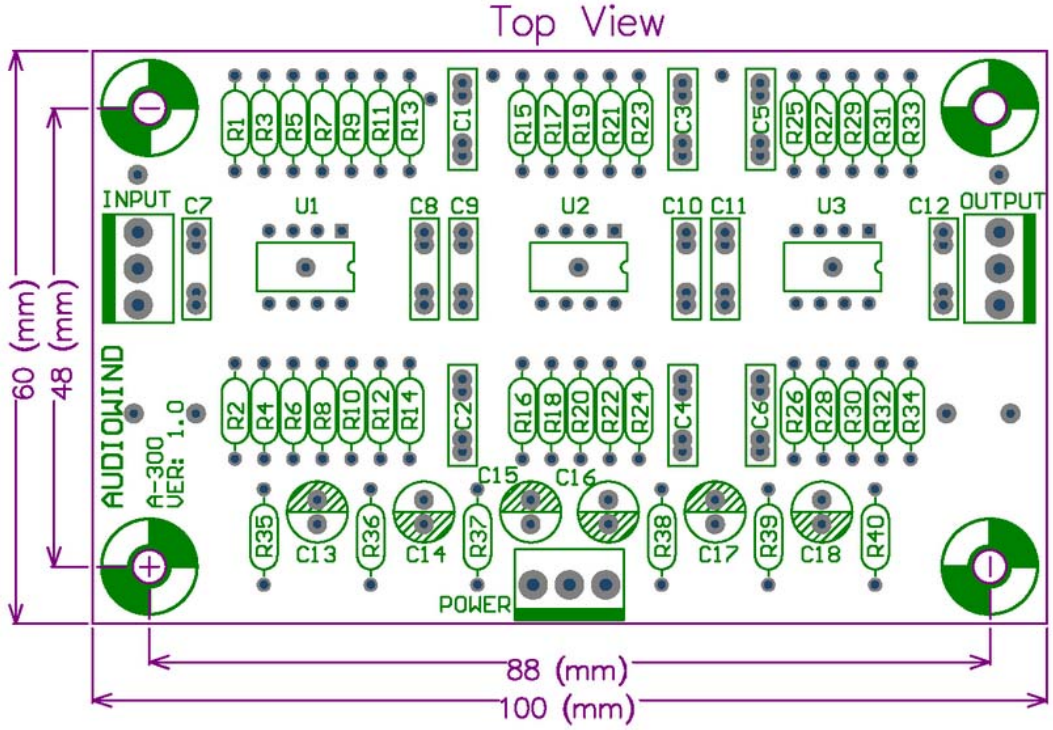

Simple Schematic:

