AudioWind
Electronics-Salon

SPECIFICATION

Model: A-130

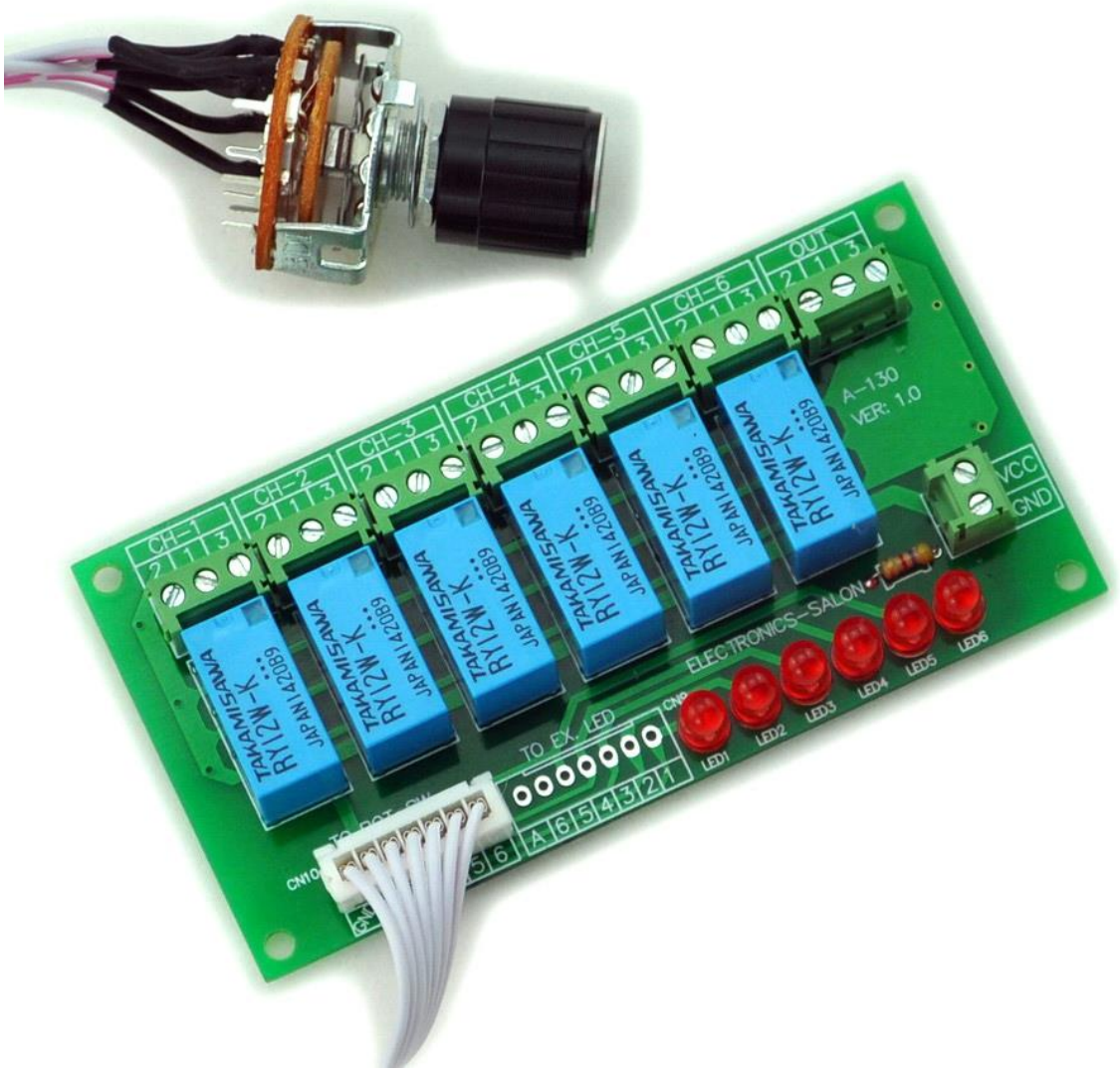

Schematic:

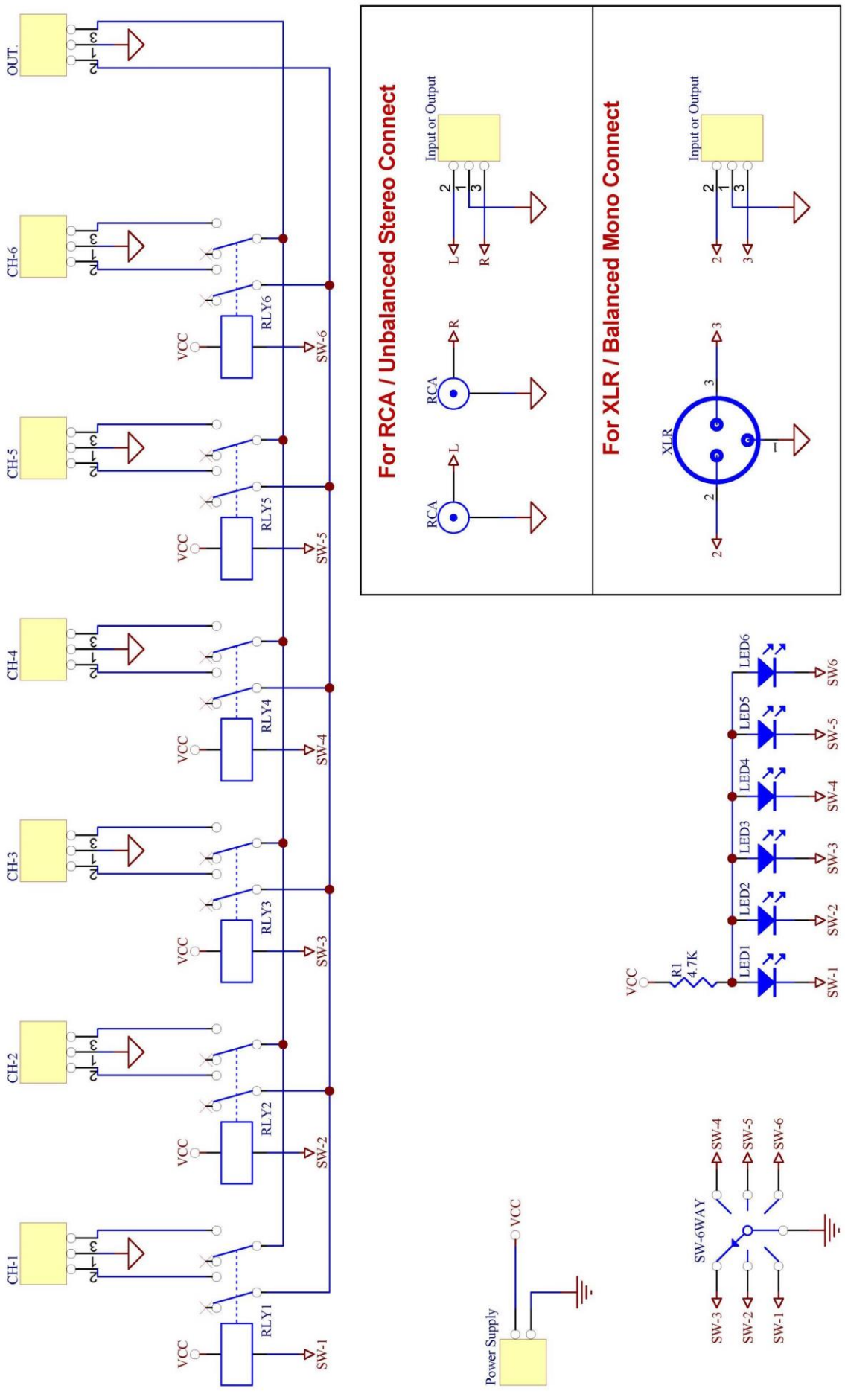
OUT.
CH-6
CH-5
CH-4
CH-3
CH-2
CH-1
VCC
RLY6
RLY5
RLY4
RLY3
RLY2
RLY1
SW-6
SW-5
SW-4
SW-3
SW-2
SW-1
For RCA / Unbalanced Stereo Connect
Input or Output
RCA
L
R
For XLR / Balanced Mono Connect
XLR
R1
4.7K
LED1
LED2
LED3
LED4
LED5
LED6
Power Supply
SW-6WAY

PCB size:

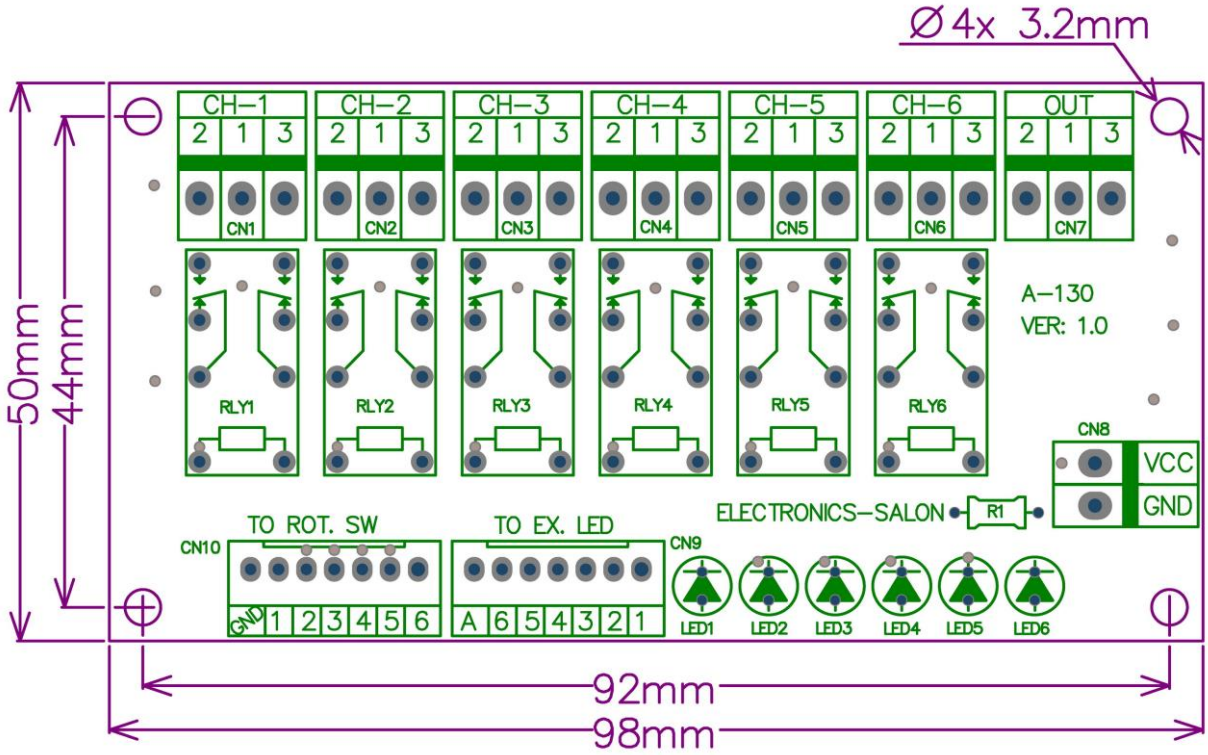
Ø4x 3.2mm
CH-1
CH-2
CH-3
CH-4
CH-5
CH-6
OUT
2 1 3
CN1
CN2
CN3
CN4
CN5
CN6
CN7
RLY1
RLY2
RLY3
RLY4
RLY5
RLY6
A-130
VER: 1.0
CN8
VCC
GND
ELECTRONICS-SALON
R1
TO ROT. SW
TO EX. LED
CN10
GND 1 2 3 4 5 6
A 6 5 4 3 2 1
CN9
LED1
LED2
LED3
LED4
LED5
LED6
50mm
44mm
92mm
98mm