AudioWind
Electronics-Salon

SPECIFICATION

Model: A-120

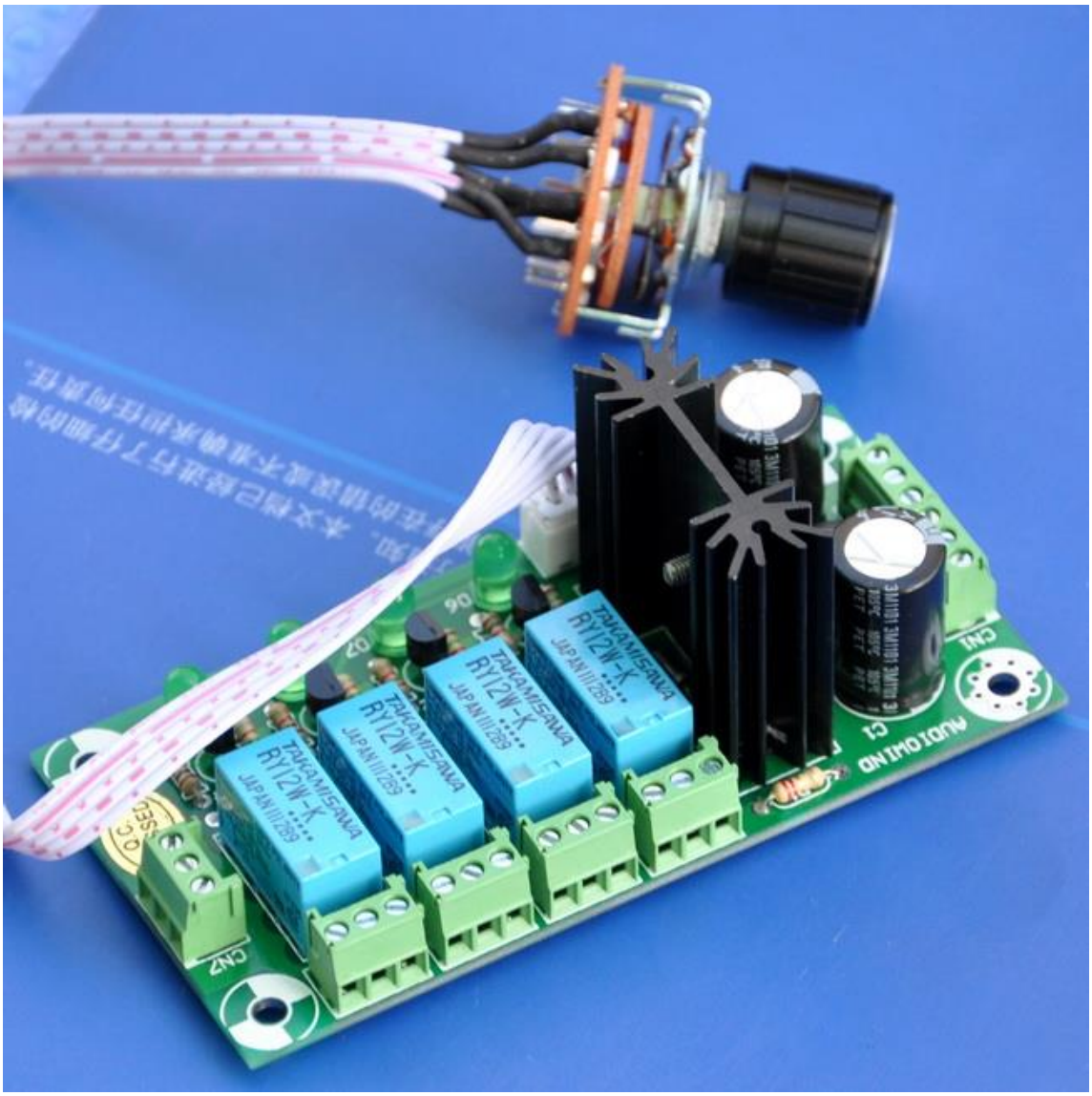

Schematic:

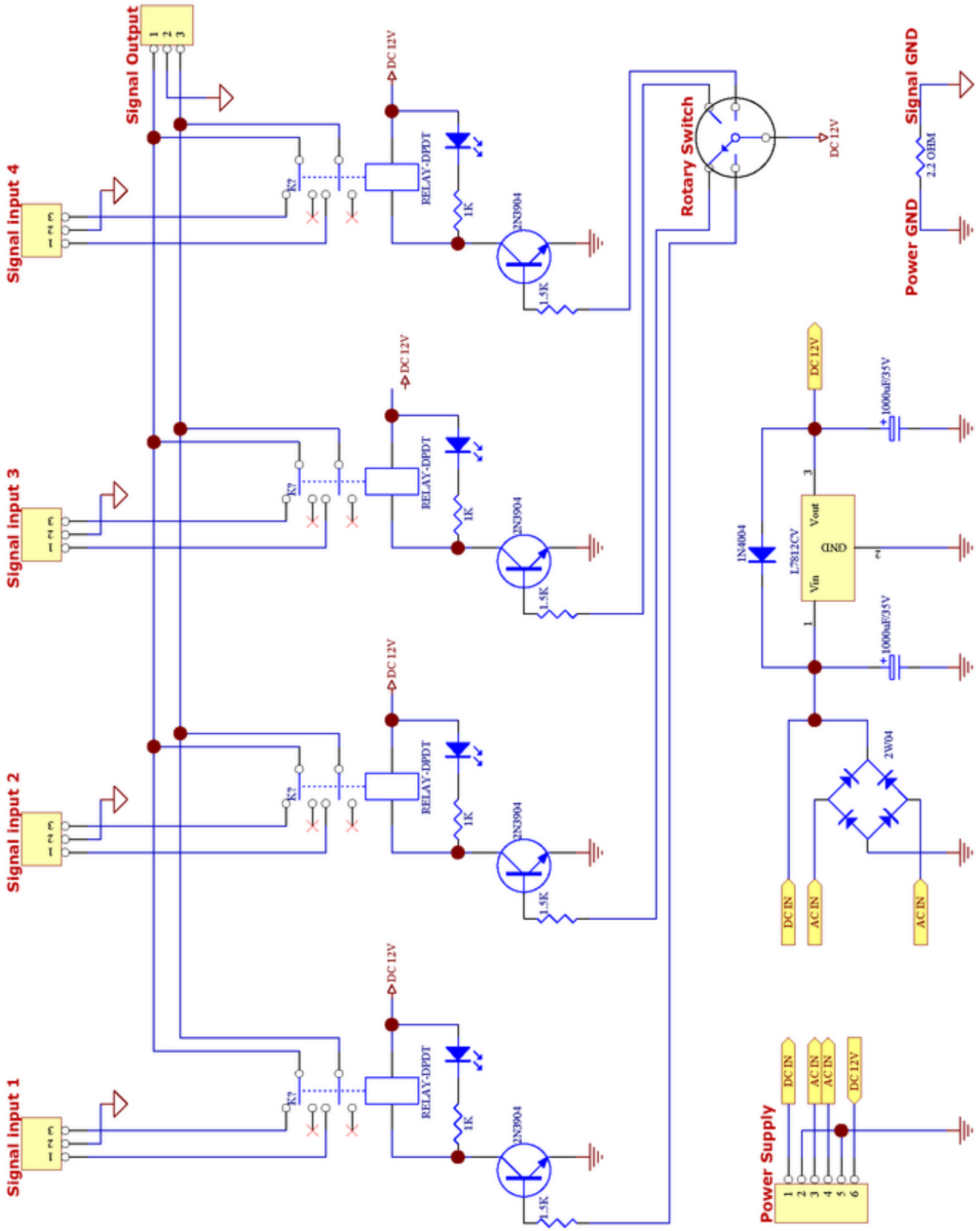
Signal Output
Signal input 4
Signal input 3
Signal input 2
Signal input 1
RELAY-DPDT
2N3904
1K
1.5K
DC 12V
Rotary Switch
Signal GND
Power GND
2.2 OHM
1N4004
L7812CV
Vout
GND
Vin
1000uF/35V
2W04
DC IN
AC IN
Power Supply

PCB:

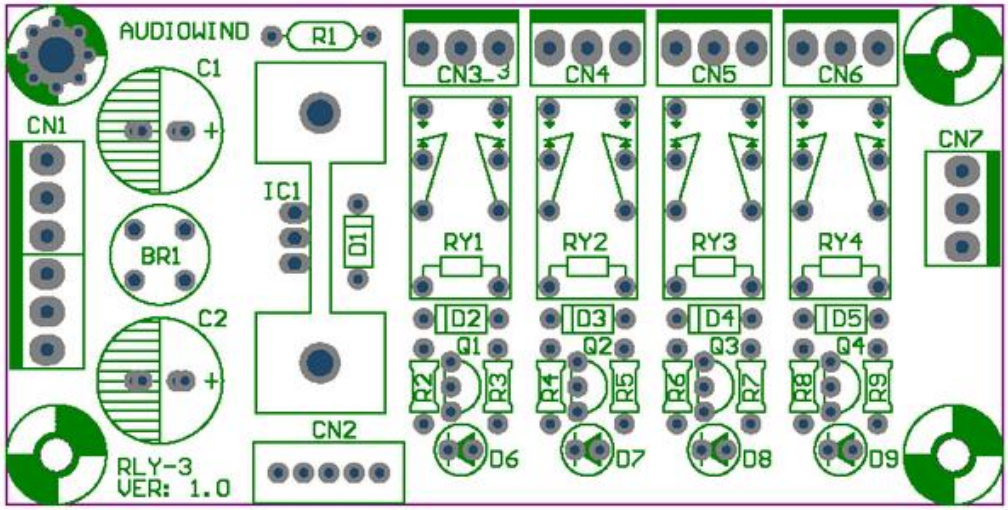
AUDIOWIND
R1
C1
CN1
IC1
D1
BR1
C2
CN2
CN3_3
CN4
CN5
CN6
CN7
RY1
RY2
RY3
RY4
D2
D3
D4
D5
Q1
Q2
Q3
Q4
R2
R3
R4
R5
R6
R7
R8
R9
D6
D7
D8
D9
RLY-3
VER: 1.0

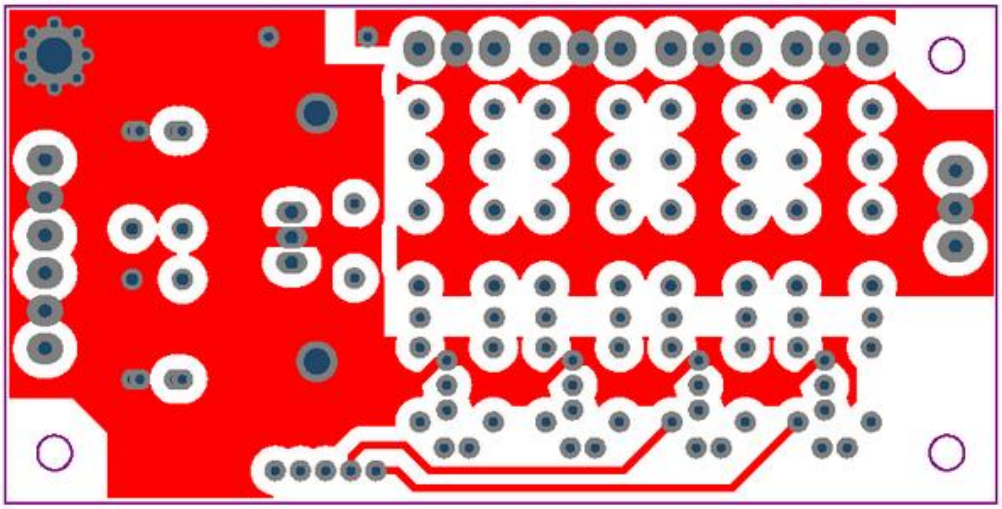

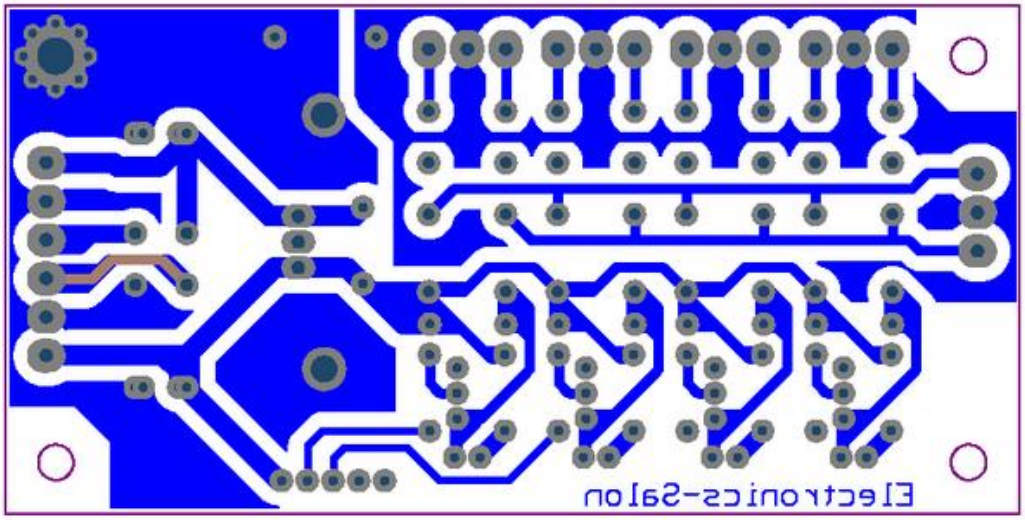
Electronics-Salon

PCB size:

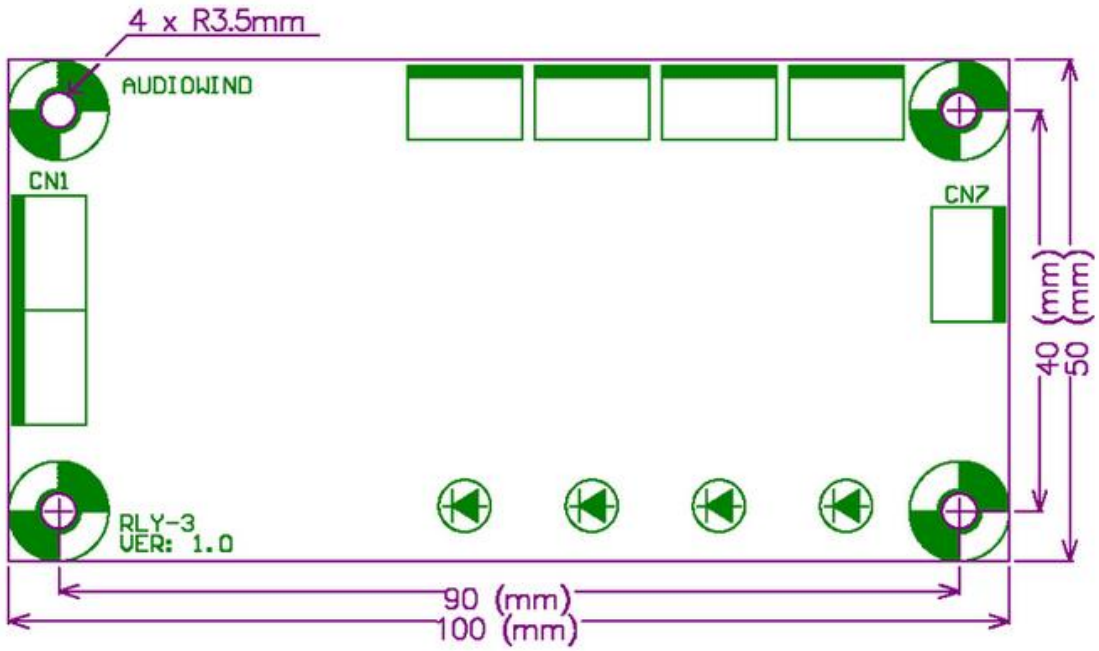

Wiring Diagram:

